Operator Interface Plus Control
LT4000M SERIES Specifications

LT4000M

- LT4000M
- Gamme
- Caractéristiques
- Spécifications
  - PFXLM4B01DDC
- Options
- Téléchargement
- Bande d'annonce

Related Information

- Produits obsolètes
- Certification
- Enregistrement logiciel

Specifications of PFXLM4B01DDC (Rear Module DIO / Source Output Type)

Display Specifications

Virtual Resolution (pixels)			320 x 240 (QVGA)
Language Fonts *1			Japanese, ASCII, Chinese (Simplified), Chinese (Traditional), Korean, Cyrillic, Thai
Character sizes			8 x 8, 8 x 16, 16 x 16 and 32 x 32 pixel fonts
Font sizes			Width can be expanded 1 to 8 times. Height can be expanded 1/2 and 1 to 8 times.
8 x 8 pixels			40 characters per row x 30 rows
8 x 16 pixels			40 characters per row x 15 rows
16 x 16 pixels			20 characters per row x 15 rows
32 x 32 pixels			10 characters per row x 7 rows
Memory	**Application memory *2**		FLASH EPROM 16 MB (includes screen editing program and extended logic program)
	Logic program area		FLASH EPROM 132 KB *3 (equivalent to 15,000 steps)
	Font area		FLASH EPROM 8 MB (when limit exceeded, uses application memory)
	Data backup		nvSRAM 128 KB (rechargeable lithium battery for data backup)
	Variable area		nvSRAM 64 KB (rechargeable lithium battery for data backup)
Touch Panel	**Type**		Resistive Film (analog)
	Lifetime		1 million touches or more
Interface	**Serial (COM1)**		RS-232C/RS485 x 1 RS-232C (Connector type: RJ45, Isolation: None, Maximum baud rate: 115,200 bps, Cable Type: Shielded, Cable Maximum length: 15 m (49 ft), 5 Vdc power supply for RS-232C: None) RS-485 (Connector type: RJ45, Isolation: None, Maximum baud rate: 115,200 bps, Cable Type: Shielded, Cable Maximum length: 200 m (656 ft), Polarization: Setting is required via software when connecting Multiple LTs. Refer to the "GP-Pro EX Device/ PLC Manual" for the setting. 5 Vdc power supply for RS-485: None) *4
	CANopen (master)		CAN-CiA (ISO 11898-2:2002 Part 2), Connector: D-sub9 (plug)
	Ethernet		IEEE802.3 compliant Ethernet x 1 (Connector type: RJ45, Driver: 10 M half duplex (auto negotiation)/ 100 M full duplex (auto negotiation), Cable type: Shielded, Automatic cross-over detection: Yes)
	USB (Type A)		USB 2.0 (Type A) x 1 (Power Supply Voltage: 5Vdc +/-5%, Maximum Current Supplied: 500mA, Maximum Transmission Distance: 5m (16.4 ft.))
	USB (Mini-B)		USB 2.0 (Mini-B) x 1
	Control	**DIO(Source Type)**	20 Points Standard Input (including 2 Points for Fast Input) 10 Points Standard Output and 2 Points Fast Output

*1 Please refer to the GP-Pro EX Reference Manual for details on font types and character codes.

*2 Capacity available for user application.

*3 Up to 60,000 steps can be converted in software. However, this reduces application memory capacity (for screen data) by 1 MB.

*4 2-wire connection is available for RS-485. When a Device/PLC supports 2-wire connection, 4 wires (RXD+, TXD+, RXD-, and TXD-) can be short-circuited to be 2 wires (RXD+ and TXD+ = D1, RXD- and TXD- = D0). For details on the connection, refer to the connection manual.

Page Top

General Specifications

Supported Standards and Regulations	UL508 / UL508 ANSI/ISA 12.12.01
Rated Input Voltage	24 Vdc
Input Voltage Limits	20 to 28.8 Vd
Acceptable Voltage Drop	10 ms or less at 20.4 Vdc
Power Consumption	7 W or less
In-Rush Current	30 A or less at 28.8 Vdc
Voltage Endurance between power terminal and frame ground (FG)	500 Vdc for 1 minute
Insulation Resistance between power terminal and FG	10 MΩ or higher at 500 Vdc

Page Top

Environmental Specifications

Standard compliance		IEC 61131-2
Ambient operating temperature	**Horizontal installation**	0 to 50°C (32 to 122°F)
	Vertical installation	0 to 40°C (32 to 104°F)
Storage temperature		- 20 to 60°C (- 4 to 140°F)
Storage altitude		0 to 10,000 m (0 to 32,808 ft)
Operating altitude		0 to 2,000 m (0 to 6,560 ft)
Surrounding Air and Strage Humidity		5 to 85% w/o condensation (non-condensing, wet bulb temperature 39°C (102.2°F) or less)
Degree of pollution	**IEC60664**	2
Degree of protection	**IEC61131-2**	IP20 with protective covers in place
Corrosive gases		Free of corrosive gases
Dust		≤0.1 mg/m^3 (10^{-7} oz/ft^3) (non-conductive levels)
Atmospheric pressure (Operating Altitude)		800 to 1,114 hPa (2000 m (6,561 ft) or lower)
Vibration resistance	**Mounted on a DIN rail**	3.5 mm (0.138 in.) fixed amplitude from 5 to 8.4 Hz 9.8 m/s^2 (1 g_n) fixed acceleration from 8.4 to 150 Hz
	Mounted on a panel	3.5 mm (0.138 in.) fixed amplitude from 5 to 8.6 Hz 9.8 m/s^2 (1 g_n) fixed acceleration from 8.6 to 150 Hz
Mechanical shock resistance	**Mounted on a DIN rail**	147 m/s^2 (15 g_n) for a duration of 11 ms
	Mounted on a panel	147 m/s^2 (15 g_n) for a duration of 6 ms
Electrostatic discharge	**IEC/EN 61000-4-2**	8 kV (air discharge) 6 kV (contact discharge)
Rediated radio frequency electromagnetic fields	**IEC/EN 61000-4-3**	10 V/m (80 MHz to 3 GHz)
Fast transients / Burst noise	**IEC/EN 61000-4-4**	Power lines: 2 kV Digital I/O: 1 kV Relay outputs: 2 kV Ethernet line: 1 kV COM line: 1 kV CAN line: 1 kV

Surge immunity	**IEC/EN 61000-4-5**	Power supply: CM: 1 kV; DM: 0.5 kV Digital I/O: CM: 1 kV; DM: 0.5 kV Shielded cable: 1 kV CM = common drive DM = differential drive
Conducted disturbances induced by radio-frequency fields	**IEC/EN 61000-4-6**	10 Veff (0.15 to 80 MHz)
Mains terminal dusturbance voltage	**EN 55011 (IEC/CISPR11)**	150 to 500 kHz, quasi peak 79 dBµV
		500 kHz to 30 MHz, quasi peak 73 dBµV
Electric field strength	**EN 55011 (IEC/CISPR11)**	30 to 230 MHz, quasi peak 10 m @40 dBµV/m
		230 MHz to 1 GHz, quasi peak 10 m @47 dBµV/m
Vibration immunity (operating)		IEC 61131-2
Protection structure		NEMA TYPE 4X (indoors, with panel embedded)
Protection (front module)		IP65f - (IEC 60529)
Protection (rear module)		IP 20 - (IEC 60529)
Shock immunity (operating)		IEC 61131-2 15 gn 11 ms
Cooling method		Natural air circulation
Weight		include Rear module installation adapter : 509g (17.96 oz) / only Rear module :353g (12.46 oz)
Color		RAL 7032
Material		PC/PBT

Page Top

Digital Inputs

Digital Input Characteristics

Rated Current		5 mA
Inrush Values	**Voltage**	30 Vdc
	Current	6.29 mA max.
Input impedance		4.9 kΩ
Input type		Sink/Source
Rated voltage		24 Vdc
Maximum Allowable Voltage		28.8 Vdc
Input limit values	**ON Voltage**	15 Vdc or more (15 to 28.8 Vdc)
	OFF Voltage	5 Vdc or less (0 to 5 Vdc)
	ON Current	2.5 mA or more
	OFF Current	1.0 mA or less
Isolation	**Method**	Photo coupler Isolation
	Between internal logic	500 Vdc
Filtering		0.5 ms x N (N is 0 to 63)
IEC61131-2 edition 3 type		Type 1
Compatibility		Supports 2 wire and 3 wire sensors
Cable type and length		Shielded: Maximum 100 m (328 ft) Non-shielded: 50 m (164 ft)
Terminal blocks		Type: 3.5 mm (0.137 in.) pitch Terminal blocks are removable
Input paralleling		No

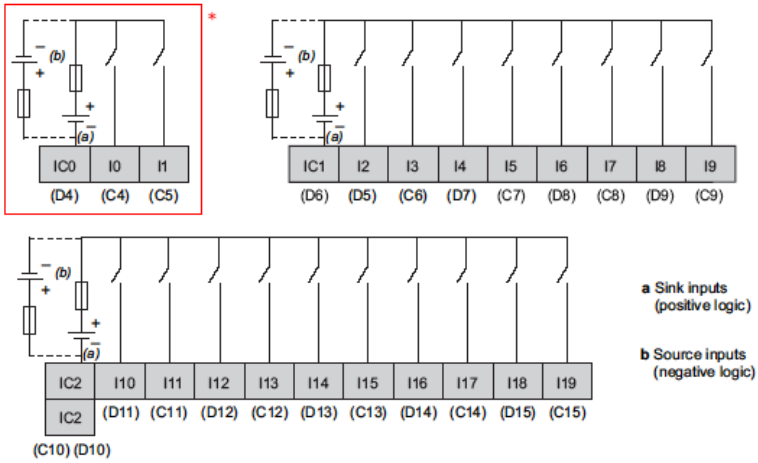

* I0 and I1 are Fast input terminals and can be also used as a Standard input. For specifications, see the specifications of Fast Input.

Page Top

High Speed Counter Input Characteristics

Rated Current	**Voltage**	24 Vdc	
	Current	7.83 mA	
Inrush values	**Voltage**	30 Vdc	
	Current	9.99 mA	
Input impedance		3.2 kΩ	
Input type		Sink/Source	
Rated voltage		24 Vdc	
Maximum Allowable Voltage		28.8 Vdc	
Input limit values	**ON Voltage**	15 Vdc or more	
	OFF Voltage	5 Vdc or less	
	ON Current	5 mA or more	
	OFF Current	1.5 mA or less	
Isolation	**Method**	Photo coupler Isolation	
	Between channels logic	500 Vdc	
Filtering		None, 4 µs, 40 µs	
IEC61131-2 edition 3 type		Type 1	
Compatibility		Supports 2 wire and 3 wire sensors	
Cable	**Type**	Shielded	
	Length	Maximum 10 m (33 ft)	
Terminal blocks		Type: 3.5 mm (0.137 in.) pitch Terminal blocks are removable	
Maximum frequency		· 100 kHz is the maximum frequency for Single-phase · 50 kHz is the maximum frequency for 2-phase · Duty Rate: 45 to 55%	
Phase Counting Mode		· Single phase · 2 Phase x2 · 2 Phase x4 · 2 Phase x2 Reverse · 2 Phase x4 Reverse	
Response time	**Marker**	1 ms	
	Preload	1 ms	
	Prestrobet	1 ms	
	Synchronize output	2 ms	
Min. Pulse Width(Pulse input)		Counter:	Pulse Catch Input signal ON width

	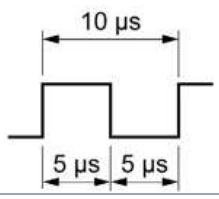	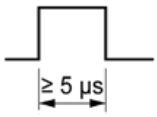
Input paralleling	No	

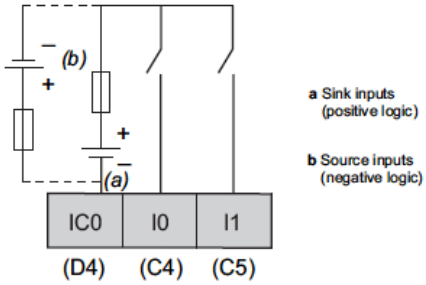

Page Top

Digital Outputs

Transistor Output Characteristics

Rated Voltage		24Vdc
Output range		19.2 to 28.8 Vdc
Output type		Source
Rated current		0.3 A/point, 3.0 A/common
Residual voltage		1.5 Vdc or less for I= 0.1A
Delay		Off to on (0.3 A load): 1.1ms On to off (0.3 A load): 2ms NOTE: The delay is not including the cable delay.
Isolation	**Method**	Photo coupler Isolation
	Between internal logic	500 Vdc
Minimum resistor load		80 Ω at 24 Vdc
Cable length		Non-shielded: 150 m (492 ft)
Protection against short circuit		No
Terminal blocks		Type: 3.5 mm (0.137 in.) pitch Terminal blocks are removable

NOTE: Refer to LT4201TM/4301TM Hardware Manual about Protecting Outputs from Inductive Load Damage for additional information on this topic.

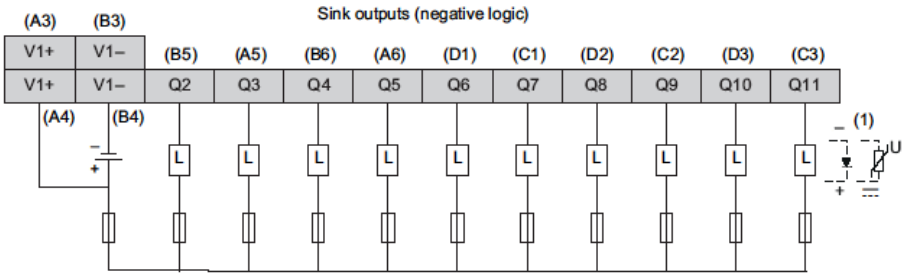

(1) When connecting as power surges

* To use 3.0A common current, connect to A3 and A4 for V1+. (B3 and B4 for V1-)

Caution: Q0 and Q1 circuits are push-pull circuits. The following is the operation of the push-pull circuit at the Sink Output and the Source Output.
Sink Output: +24(V) is output to terminal Q0, Q1 when the logic for Q0, Q1 is off
Source Output: 0(V) is output to terminal Q0, Q1 when the logic for Q0, Q1 is off

Standard Output terminals Q2 or later are common open collector outputs.

Do not connect Fast Output terminals Q0, Q1 and Standard Output terminals Q2 or later. It will short.

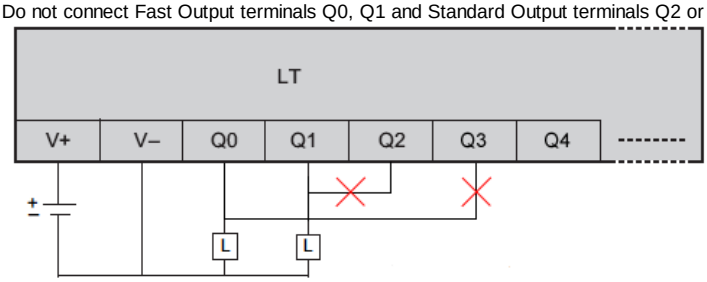

If you add a manual circuit to terminal Q0, Q1, isolate the manual circuit and terminal Q0, Q1 with a relay. Without isolation, it will short.

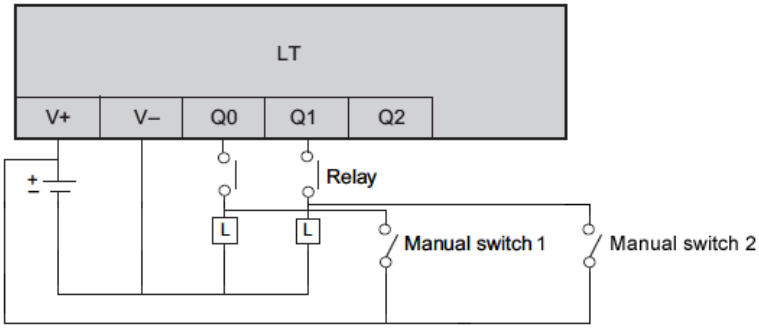

Page Top

Pulse Output/PWM Output/High-speed Counter (Synchronize Output) Characteristics

Output type		Source	
Rated voltage		24 Vdc	
Power supply input range		19.2 to 28.8 Vdc	
Power supply reverse protection		Yes	
Pulse Output/PWM output current		50 mA/point, 100 mA/common	
Response time for original input		2 ms	
Isolation resistance	**Between fast outputs and internal logic**	10 MΩ or more	
	Between power supply port and protective earth ground (PE) = 500 Vdc	10 MΩ or more	
Residual voltage	**for I = 0, 1 A**	1.5 Vdc or less	
Delay		Off to on (50 mA load): 1.1ms On to off (50 mA load): 1.1ms NOTE: The delay is not including the cable delay.	
Minimum load impedance		80 Ω	
Maximum Pulse output frequency		50 KHz	
Maximum PWM output frequency		65 kHz	
Accuracy Pulse Output/ PWM Output	**Frequency**	Accuracy	Duty
	10 to 100 Hz	0.1%	0 to 100%
	10 to 1000 Hz	1%	1 to 99%
	1.001 to 20 kHz	5%	5 to 95%
	20.001 to 45 kHz	10%	10 to 90%
	45.001 to 65 kHz	15%	15 to 85%
Duty rate range		1 to 99%	
Cable	**Type**	Shielded, including 24 Vdc power supply	
	Length	Maximum 5 m (16 ft)	
Terminal blocks		Type: 3.5 mm (0.137 in.) pitch Terminal blocks are removable	

NOTE: When using the acceleration/deceleration pulse output, there is a 1% maximum error for the frequency.

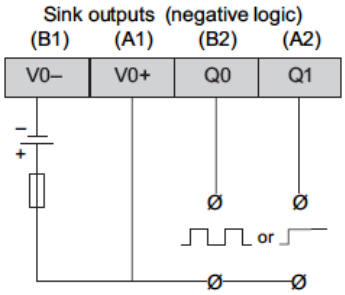

Caution: Q0 and Q1 circuits are push-pull circuits. The following is the operation of the push-pull circuit at the Sink Output and the Source Output.
Sink Output: +24(V) is output to terminal Q0, Q1 when the logic for Q0, Q1 is off
Source Output: 0(V) is output to terminal Q0, Q1 when the logic for Q0, Q1 is off

Standard Output terminals Q2 or later are common open collector outputs.
Do not connect Fast Output terminals Q0, Q1 and Standard Output terminals Q2 or later. It will short.

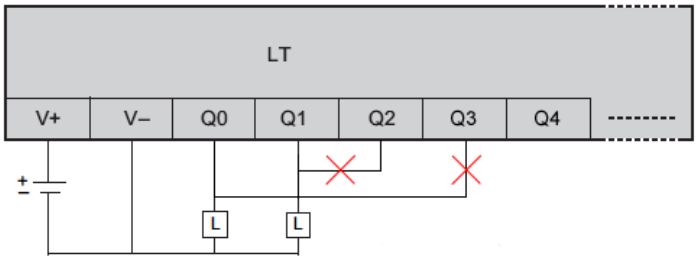

If you add a manual circuit to terminal Q0, Q1, isolate the manual circuit and terminal Q0, Q1 with a relay. Without isolation, it will short.

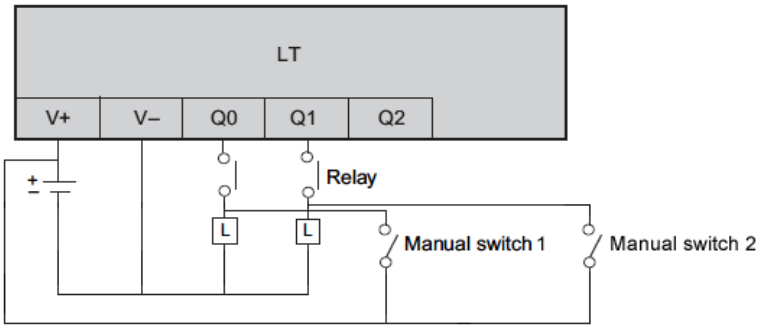

Page Top

Terminal Blocks

Pin Arrangement	Group	Pin	Signal Name	Group	Pin	Signal Name
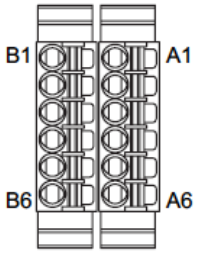	Fast Output	A1	V0+	Fast Output	B1	V0-
		A2	Q1		B2	Q0
	Standard Output	A3	V1+	Standard Output	B3	V1-
		A4	V1+		B4	V1-
		A5	Q3		B5	Q2
		A6	Q5		B6	Q4

Pin Arrangement	Group	Pin	Signal Name	Group	Pin	Signal Name

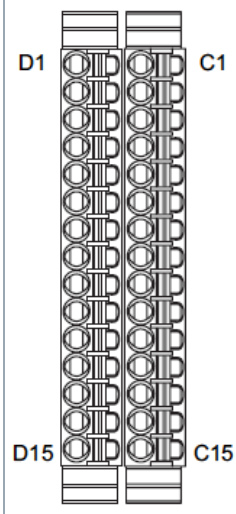

Standard Output	C1	Q7	Standard Output	D1	Q6
	C2	Q9		D2	Q8
	C3	Q11		D3	Q10
Fast Input/Standard Input	C4	I0	Fast Input/Standard Input	D4	IC0
	C5	I1	Standard Input	D5	I2
Standard Input	C6	I3		D6	IC1
	C7	I5		D7	I4
	C8	I7		D8	I6
	C9	I9		D9	I8
	C10	IC2		D10	IC2
	C11	I11		D11	I10
	C12	I13		D12	I12
	C13	I15		D13	I14
	C14	I17		D14	I16
	C15	I19		D15	I18

Page Top

Home | Produits | Support | Contactez-nous | Pro-face... | Recherche

Recherche

Privacy Policy